DIMENSIONAL DRAWING: ET2094

PROJECTED CAPACITIVE MODEL

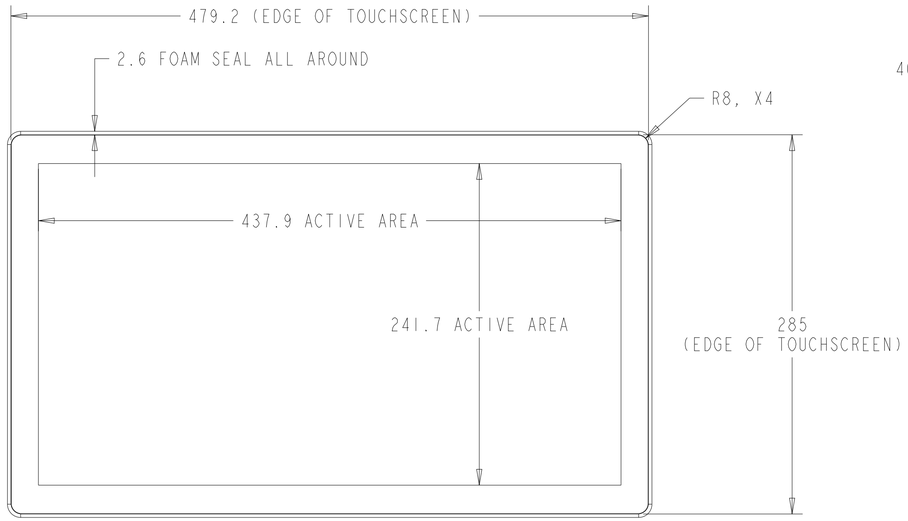

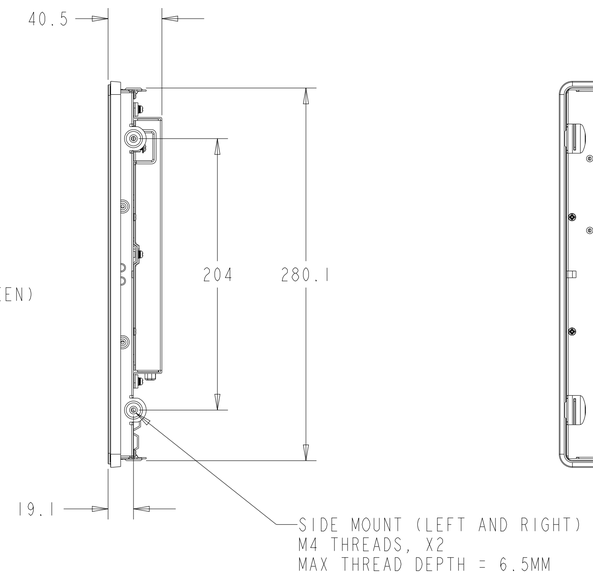

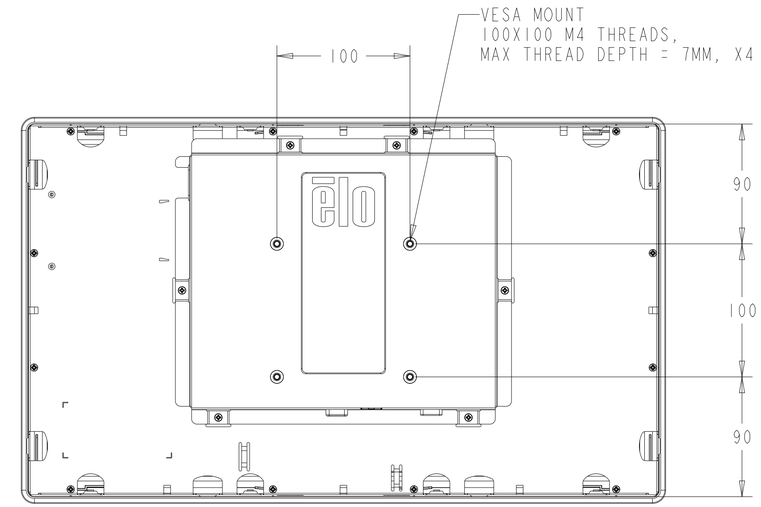

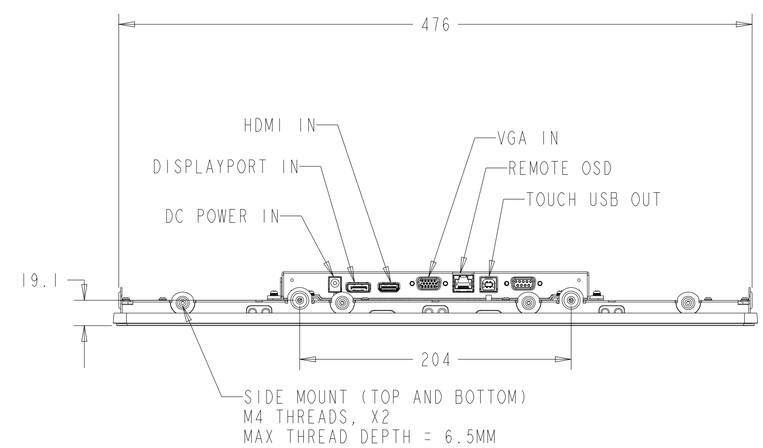

DIMENSIONS ARE IN MILLIMETERS

elo

MS601693
DATE: 09/19/2019
REV: D

DIMENSIONAL DRAWING: ET2094

PROJECTED CAPACITIVE MODEL

WITH FLUSH MOUNTING BRACKETS (4 INCLUDED)
REPLACEMENT BRACKET KIT P/N E190706 AVAILABLE SEPARATELY

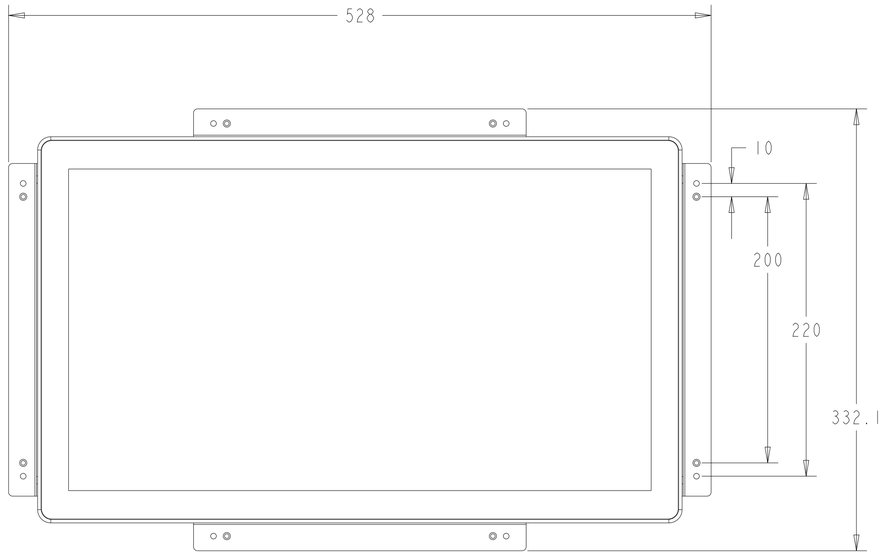

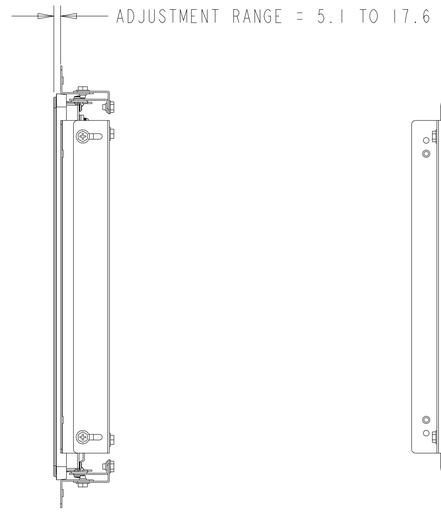

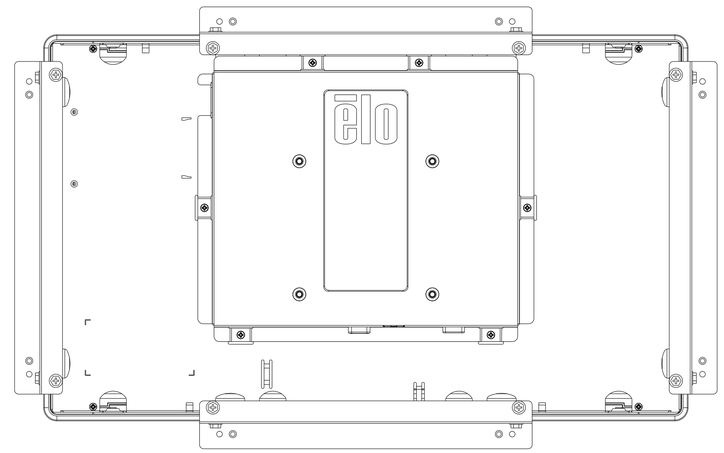

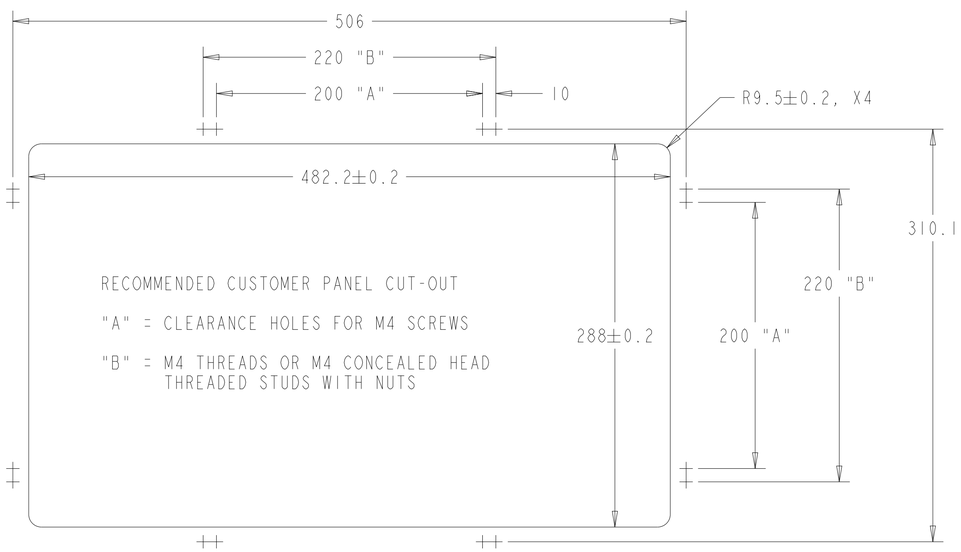

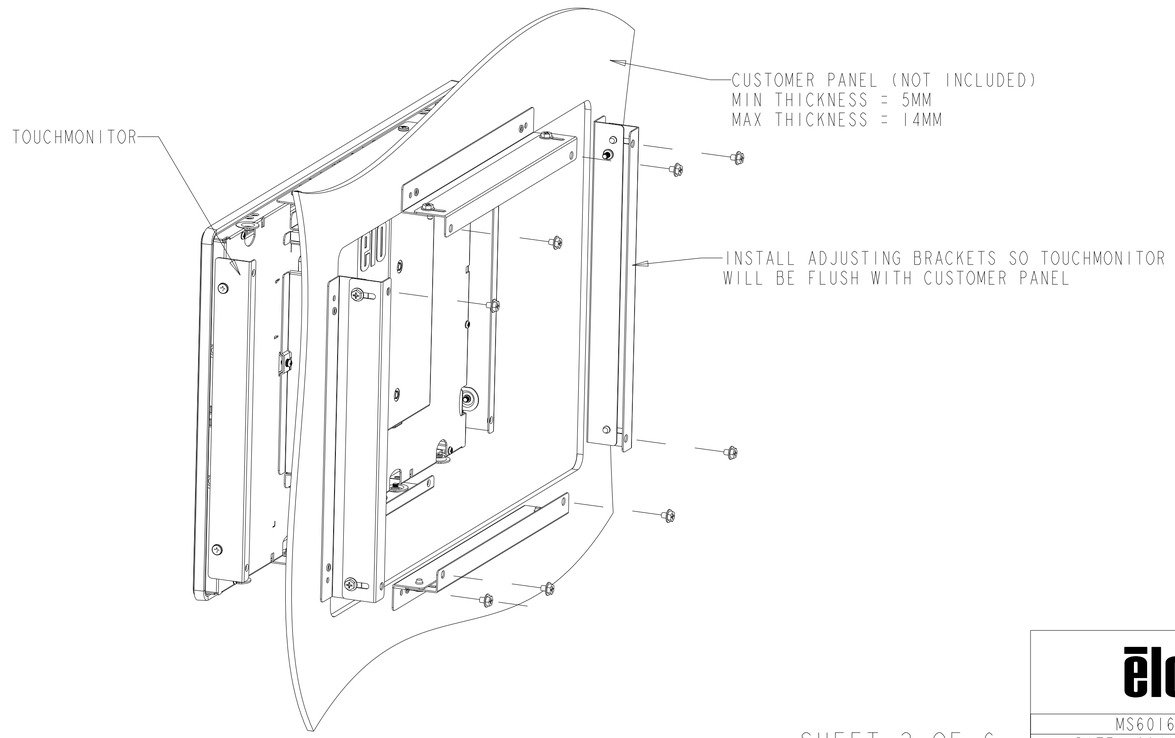

DIMENSIONS ARE IN MILLIMETERS

SHEET 2 OF 6

elo

MS601693
DATE: 09/19/2019
REV: D

DIMENSIONAL DRAWING: ET2094

INTELLITOUCH, ACCUTOUCH, AND SECURETOUCH MODEL

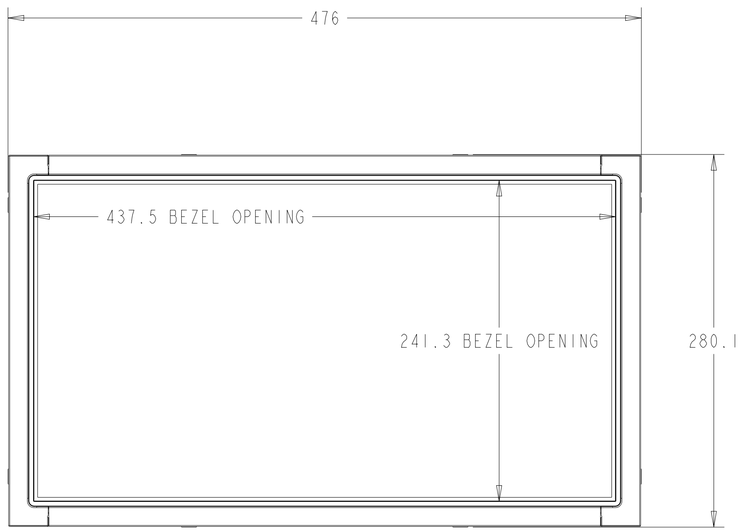

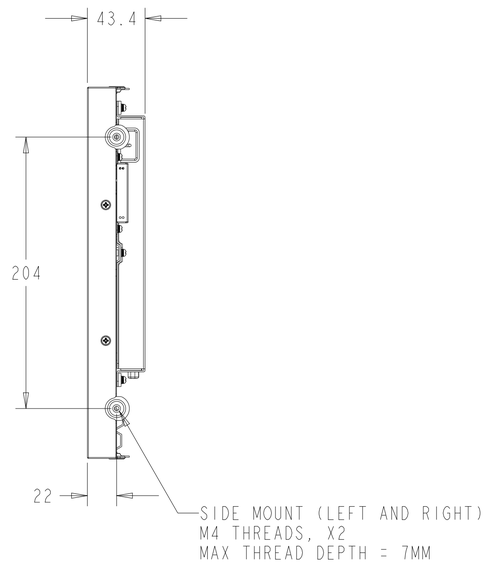

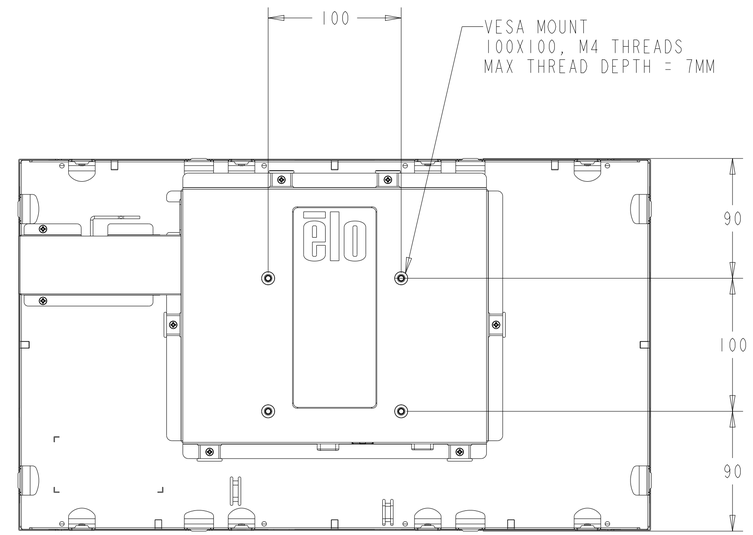

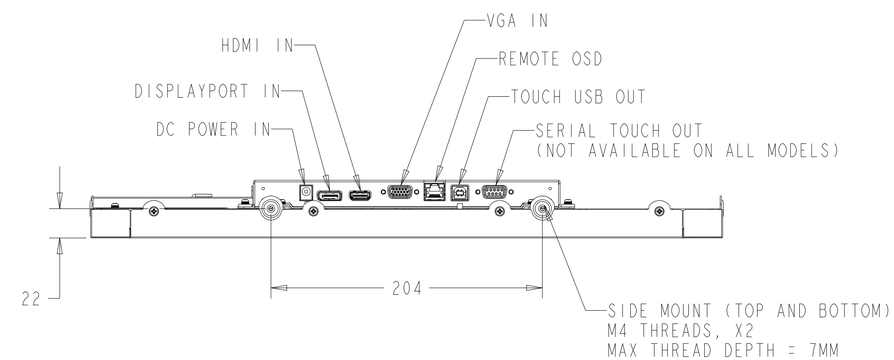

DIMENSIONS ARE IN MILLIMETERS

elo

MS601693
DATE: 09/19/2019
REV: D

DIMENSIONAL DRAWING: ET2094

INTELLITOUCH, ACCUTOUCH, AND SECURETOUCH MODEL

WITH SIDE MOUNTING BRACKETS (4 INCLUDED)
REPLACEMENT BRACKET KIT P/N E201156 AVAILABLE SEPARATELY

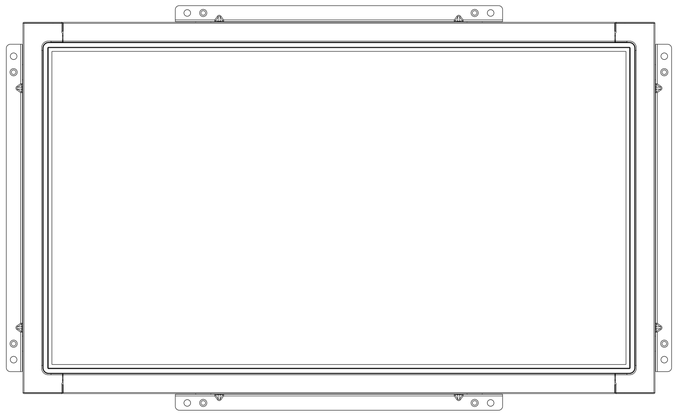

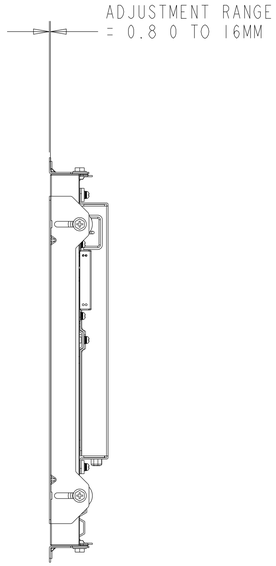

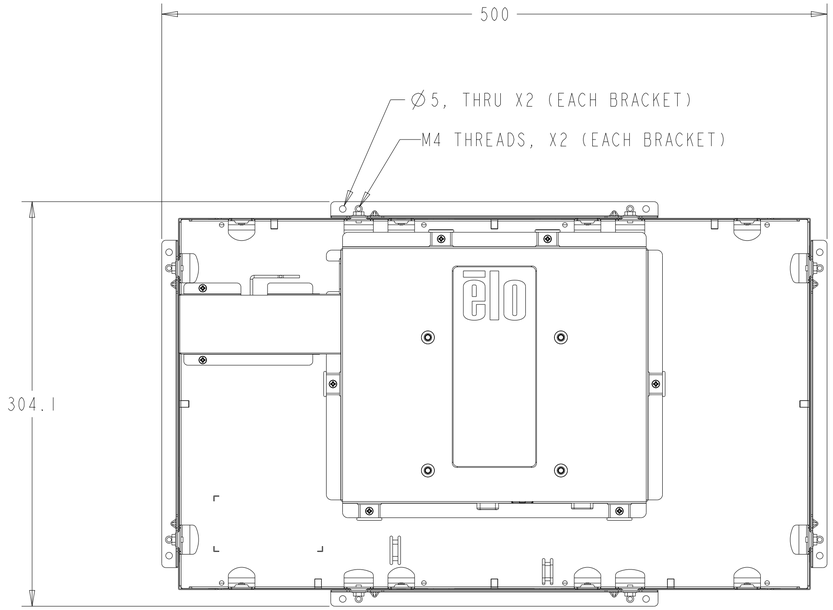

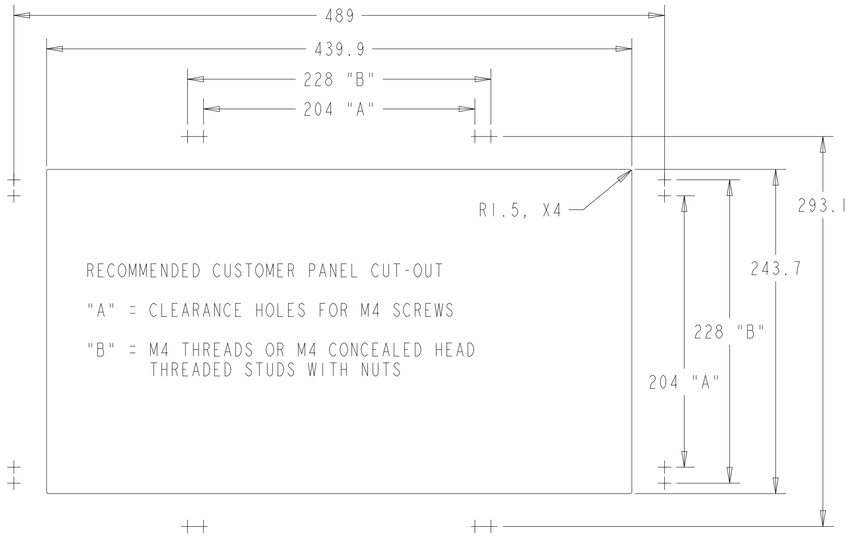

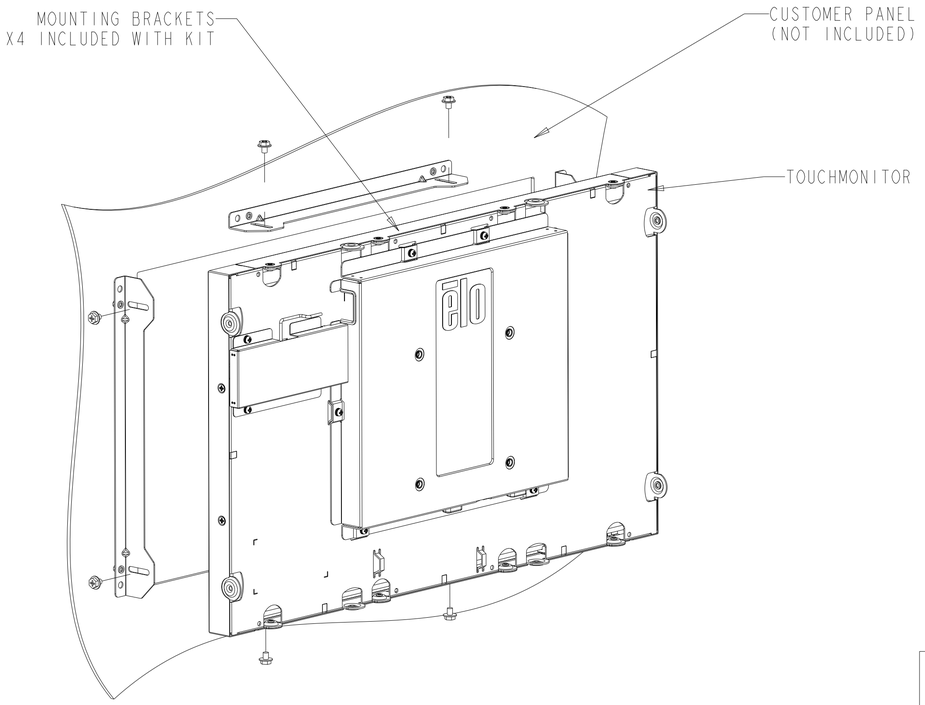

DIMENSIONS ARE IN MILLIMETERS

elo

MS601693
DATE: 09/19/2019
REV: D

DIMENSIONAL DRAWING: ET2094

OPTIONAL FRONT MOUNT BEZEL KIT P/N E553352
COMPATIBLE WITH INTELLITOUCH, ACCUTOUCH, AND SECURETOUCH MODEL ONLY

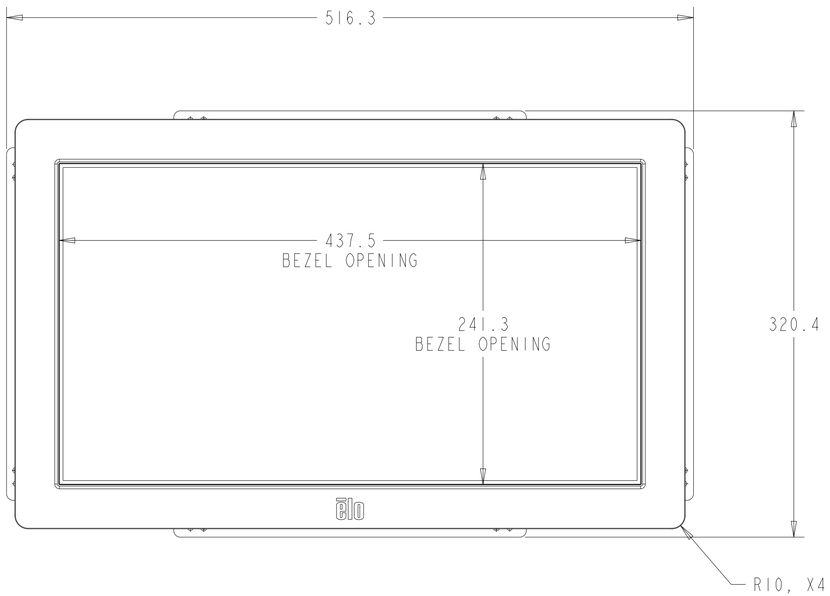

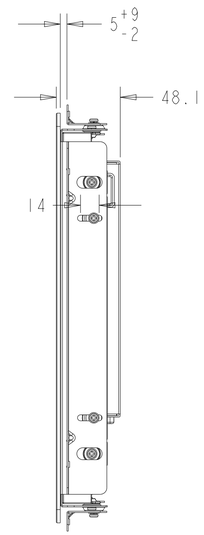

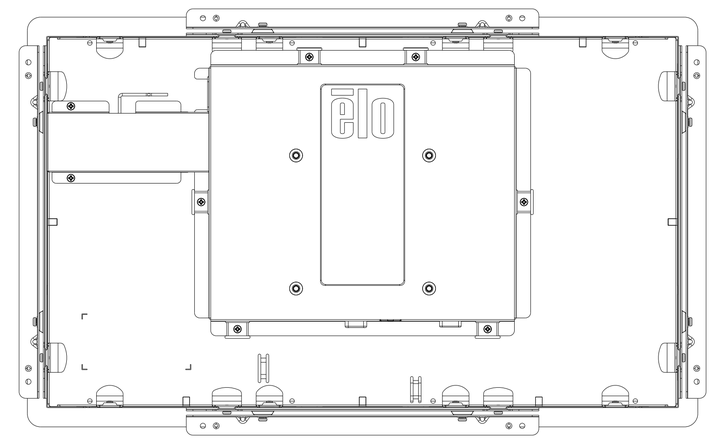

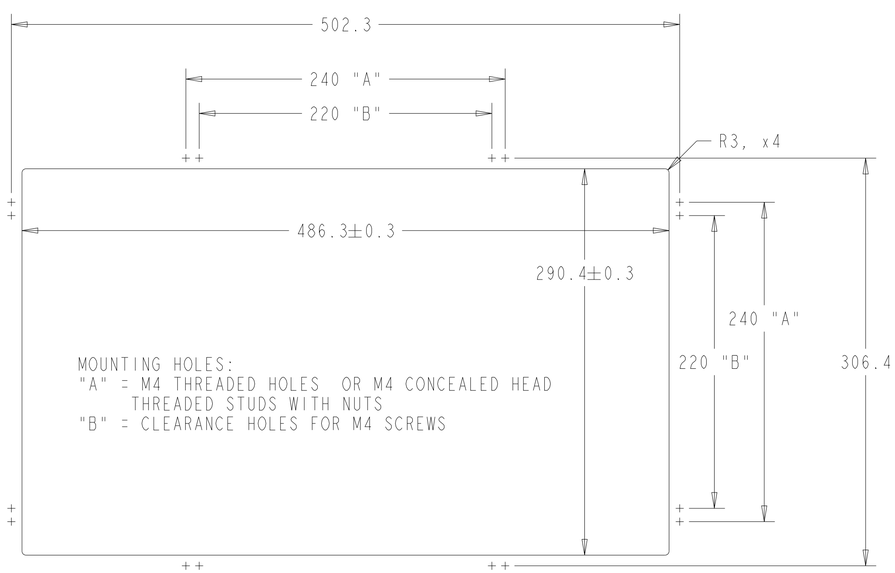

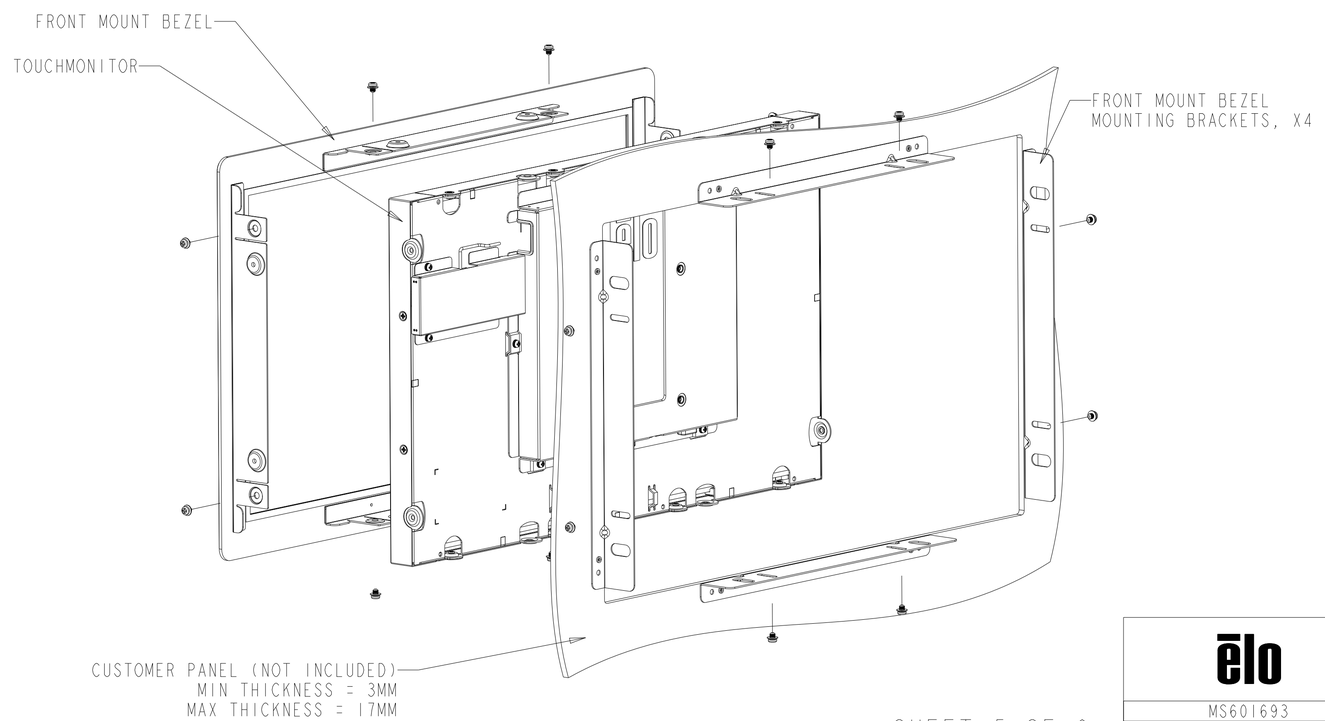

DIMENSIONS ARE IN MILLIMETERS

SHEET 5 OF 6

elo

MS601693
DATE: 09/19/2019
REV: D

DIMENSIONAL DRAWING: ET2094

OPTIONAL RACK MOUNT BEZEL KIT P/N E553538
COMPATIBLE WITH INTELLITOUCH, ACCUTOUCH, AND SECURETOUCH MODEL ONLY

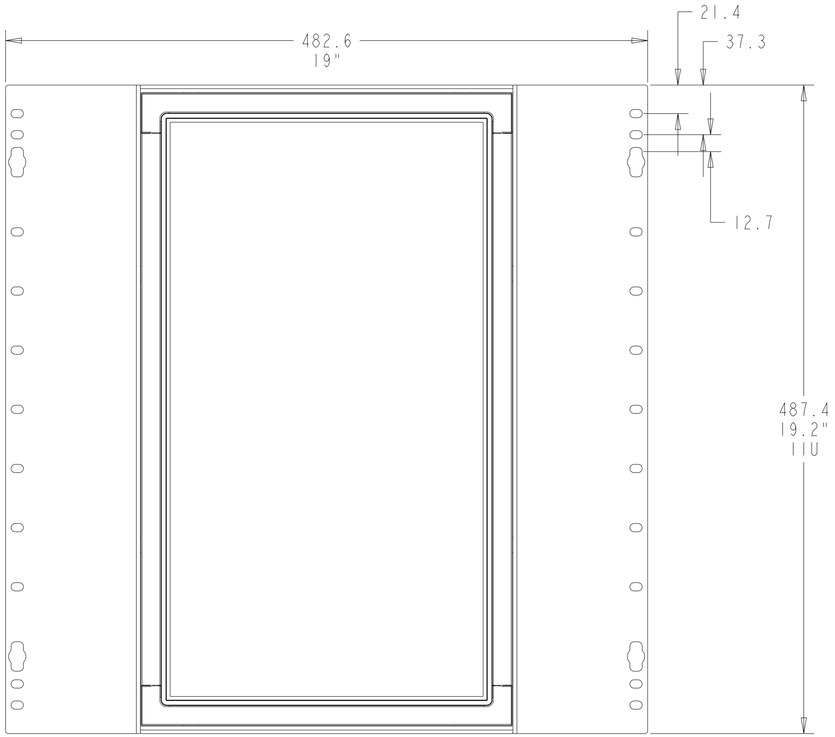

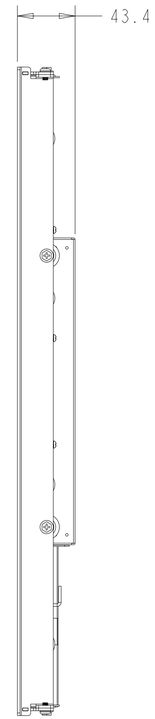

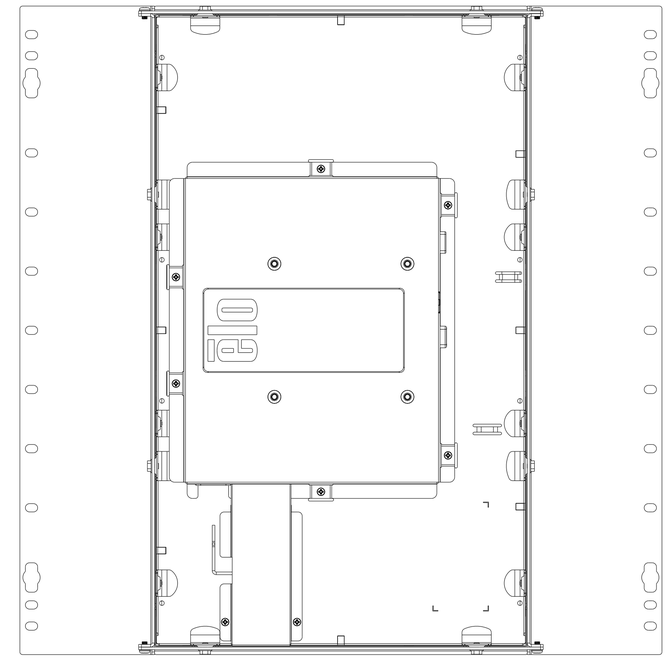

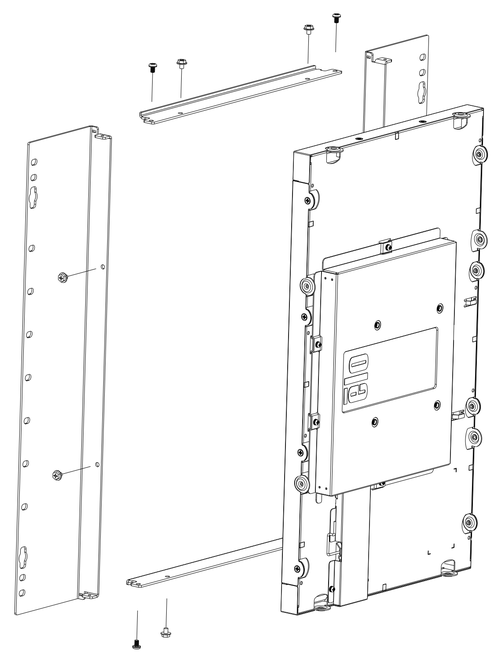

NOTES:
1. REQUIRES 1IU RACK SPACE
2. TOUCHMONITOR IS MOUNTED IN PORTRAIT ORIENTATION
3. HOLE SPACING PER EIA-310-D

DIMENSIONS ARE IN MILLIMETERS

SHEET 6 OF 6

elo

MS601693
DATE: 09/19/2019
REV: D